The Eliminator 400 Series: Walk-In Hood

Applications: University; Research; Private Industry

SPECIFY FITTINGS/ FIXTURES REQUIRED:

NONE
SERVICE
NONE
SERVICE
NONE
SERVICE
NONE
SERVICE
NONE
SERVICE

SPECIFY FITTINGS/ FIXTURES REQUIRED:

NONE
SERVICE
NONE
SERVICE
NONE
SERVICE
NONE
SERVICE
NONE
SERVICE

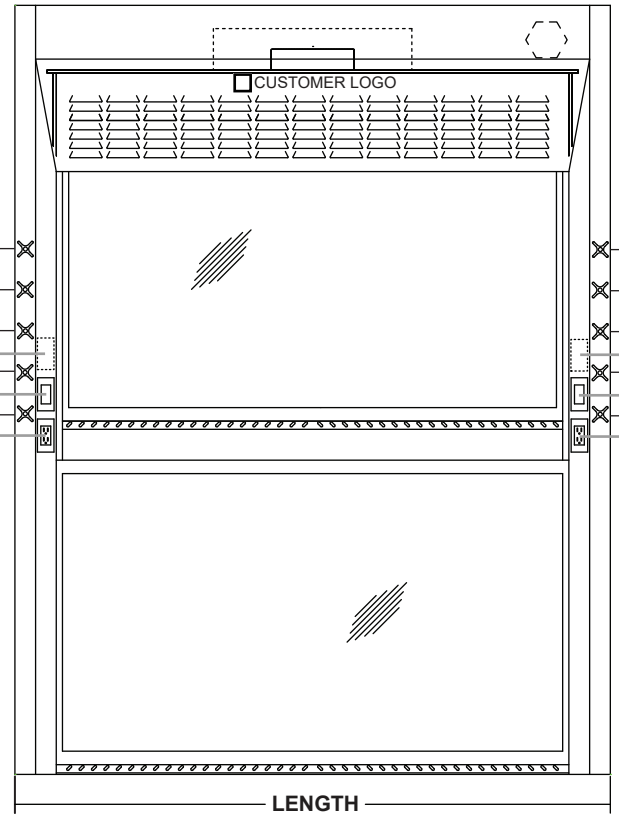

NONE

BLOWER SWITCH (OPTIONAL) ☐

120V GFI DUPLEX (OPTIONAL) ☐

NONE

☐ LIGHT SWITCH (OPTIONAL)

☐ 120V GFI DUPLEX (OPTIONAL)

Liner Material:

POLY RESIN (standard)

Pre-Piping:

NONE

Bypass Type:

OPEN BYPASS (standard)

Wiring Diagram:

☐ WIRING DIAGRAM REQUIRED

☐48" ☐60" ☐72" ☐96" ☐120"

Special Requirements: _____

_____

_____

_____

Special Depth Required? ☐ Yes ☐ No

Specify Interior Depth _____

Special Height Required? ☐ Yes ☐ No
Standard Height 85"

Specify Interior Height _____

** For proper installation & functionality of fume hood, flooring must be leveled by owner prior to delivery of fume hoods.

Standard Features

- **Interior Baffle Arrangement:**
  Fixed Baffles (standard)
- **Exhaust Collar:**
  Type 304 s/s - 10" Dia. Round (standard)
  Other _____
- **Interior Lighting Fixture:**
  Standard LED Fixtures (standard)
- **Sash Frame & Glass:**
  Painted Steel Frame w/ Laminated Safety Glass (standard)
- **Sash Type:**
  Vertical (standard)

Optional Accessories

Lattice Assembly:
NONE

Interior Lighting Fixture:
☐ Explosion Proof Light

Sash Frame & Glass:
☐ Stainless Steel Frame w/ Laminated Safety Glass

Ceiling Enclosure:
☐ Yes (Height:_____) ☐ No
- **Hinged Access Panel on Ceiling Enclosures?:**
  ☐ Yes ☐ No

Sash Type:
COMBINATION (Horizontal + Vertical)

Additional Options:
☐ Blower
☐ Sash Stops
☐ Sash Locks
☐ Sash Alarm
☐ Sash Cap
☐ Panel Mounted Cupsink
☐ Stainless Steel Ramp
☐ Epoxy Flooring

Pass Through Cord Ports
☐ 1.5" Dia. Front Post Cord Ports
☐ _____ Dia. Side Panel Cord Ports (please specify size)

Service Fixture Type:
Special Plumbing Requirements

AIR MASTER SYSTEMS

AIR MASTER SYSTEMS CORP
6480 Norton Center Dr.
Muskegon, MI 49441
Tel: (231) 798-1111 Fax: (231) 798-4000

Customer: _____

Qty: _____

Color: _____

The Eliminator 400 Series: Walk-In Hood

Applications: University; Research; Private Industry

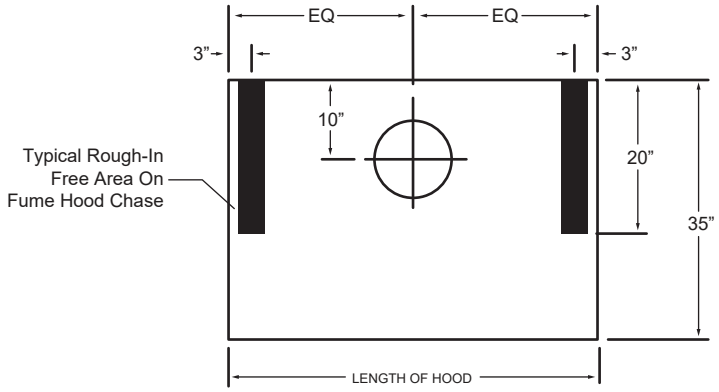

Service Rough-In Detail
(For 48”, 60”, & 72” Hoods)

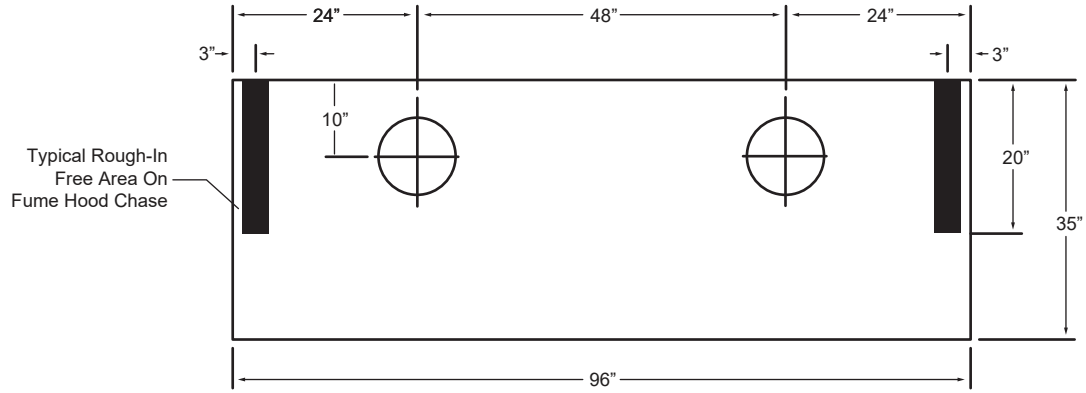

Service Rough-In Detail
(For 96” Hoods)

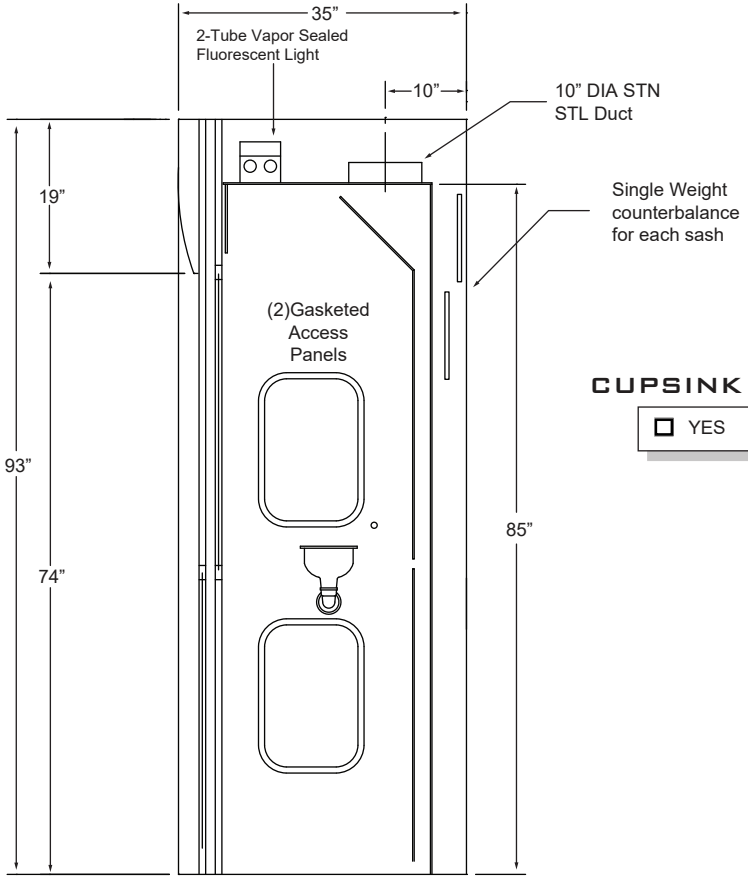

Cupsink Options:

☐ YES ☐ NO

Part #	Superstructure			Hood Opening		CFM @18”	CFM @36”	CFM @72”	SP	Blower Model #	Shipping Weight
	W	H	D	W	H						
EH-411-48	48”	93”	35”	38”	72”	445	990	1979	.25	BL-400-48	560
EH-411-60	60”	93”	35”	50”	72”	653	1306	2613	.34	BL-400-60	675
EH-411-72	72”	93”	35”	62”	72”	812	1623	3246	.50	BL-400-72	790
EH-411-96	96”	93”	35”	86”	72”	1128	2256	4513	.34	BL-400-96	1025
EH-411-120	120”	93”	35”	108”	72”	1444	2889	5780	.58	BL-400-96	2500

*Height of open sash; CFM Calculated at 100 FPM