The Eliminator 600 Series: Radio Isotope Hood

Applications: K-12; University; Private Industry

SPECIFY FITTINGS/ FIXTURES REQUIRED:

NONE SERVICE
NONE SERVICE
NONE SERVICE
NONE SERVICE
NONE SERVICE

SPECIFY FITTINGS/ FIXTURES REQUIRED:

NONE SERVICE
NONE SERVICE
NONE SERVICE
NONE SERVICE
NONE SERVICE

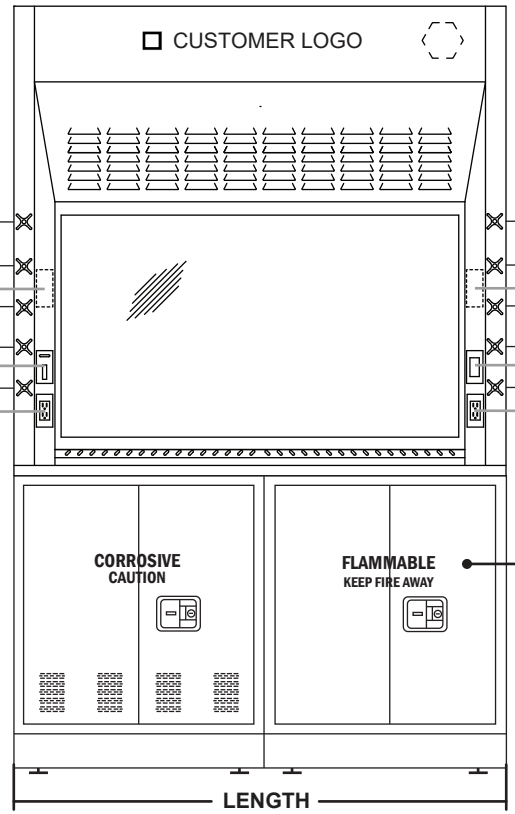

NONE

BLOWER SWITCH (OPTIONAL) ☐

120V GFI DUPLEX (OPTIONAL) ☐

NONE

☐ LIGHT SWITCH (OPTIONAL)

☐ 120V GFI DUPLEX (OPTIONAL)

☐ 36" ☐ 48" ☐ 60" ☐ 72" ☐ 96"

LINER MATERIAL:

POLY RESIN (standard)

PRE-PIPING:

NONE

BYPASS TYPE:

OPEN BYPASS (standard)

BASE CABINET OPTIONS:

NONE	___"W x ___"H x ___"D
NONE	___"W x ___"H x ___"D
NONE	___"W x ___"H x ___"D

CABINET PULL OPTIONS:

N/A

WIRING DIAGRAM:

NO

Special Requirements: _____

_____

_____

_____

STANDARD FEATURES

- **Interior Baffle Arrangement:**
  Fixed Baffles (standard)
- **Exhaust Collar:**
  Type 304 s/s - 10" Dia. Round (standard)
  Other _____
- **Interior Lighting Fixture:**
  Standard LED Fixtures (standard)
- **Sash Frame & Glass:**
  304 Stainless Steel Frame w/ Laminated Safety Glass (standard)
- **Sash Type:**
  Vertical (standard)
- **Additional Features:**
  304 Stainless Steel Airfoil
  Type 304 Stn. Stl. one-piece integral work surface & liner

OPTIONAL ACCESSORIES

Lattice Assembly:
NONE

Interior Lighting Fixture:
☐ Explosion Proof Light

Sash Frame & Glass:
☐ 316 Stainless Steel Frame w/ Laminated Safety Glass

Airfoil:
PAINTED STEEL (STANDARD)

Trough:
PAINTED STEEL (STANDARD)

Ceiling Enclosure:
☐ Yes (Height:_____) ☐ No
- **Hinged Access Panel on Ceiling Enclosures?:**
  ☐ Yes ☐ No

Finished Back:
☐ Yes ☐ No

Sash Type:
COMBINATION (Horizontal + Vertical)

Additional Options:
☐ Blower ☐ Sash Alarm
☐ Automatic Sash Return ☐ Sash Locks
☐ Sash Cap ☐ Sash Stops

Service Fixture Type:
Special Plumbing Requirements

Pre-Wire + Electrical:
☐ Yes ☐ No

AIR MASTER SYSTEMS

AIR MASTER SYSTEMS CORP
6480 Norton Center Dr.
Muskegon, MI 49441
Tel: (231) 798-1111 Fax: (231) 798-4000

Customer: _____

Qty: _____

Color: _____

The Eliminator 600 Series: Radio Isotope Hood

Applications: K-12; University; Private Industry

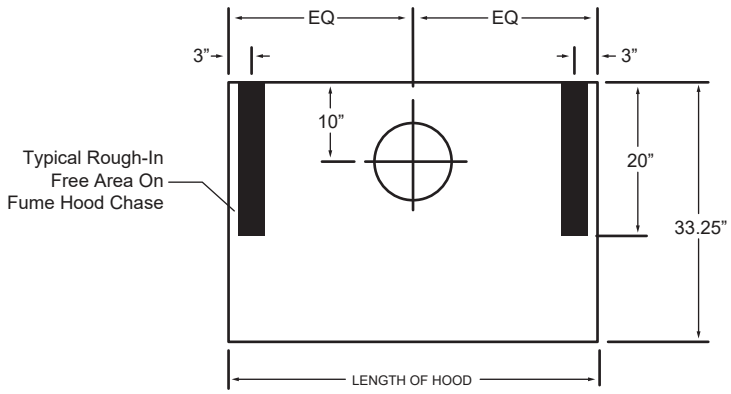

Service Rough-In Detail
(For 36”, 48”, 60”, & 72” Hoods)

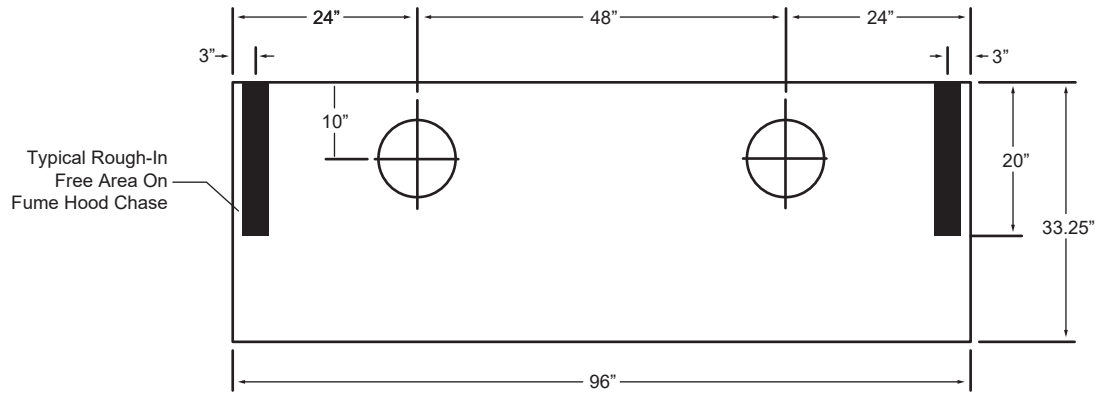

Service Rough-In Detail
(For 96” Hoods)

Epoxy Work Surface
(Specify location of cupsink)

*When utilizing 22” deep cabinets, cup sink measurement changes to 5.25” in lieu of 9”

Note: This location will have the cup sink sit slightly under the baffle.

☐ Include Acid Cabinet Vent Hole

Cupsink Options:

NONE

☐ ADD 0.25” RAISED RIM

Work Surface Material:

BLACK EPOXY (Standard)

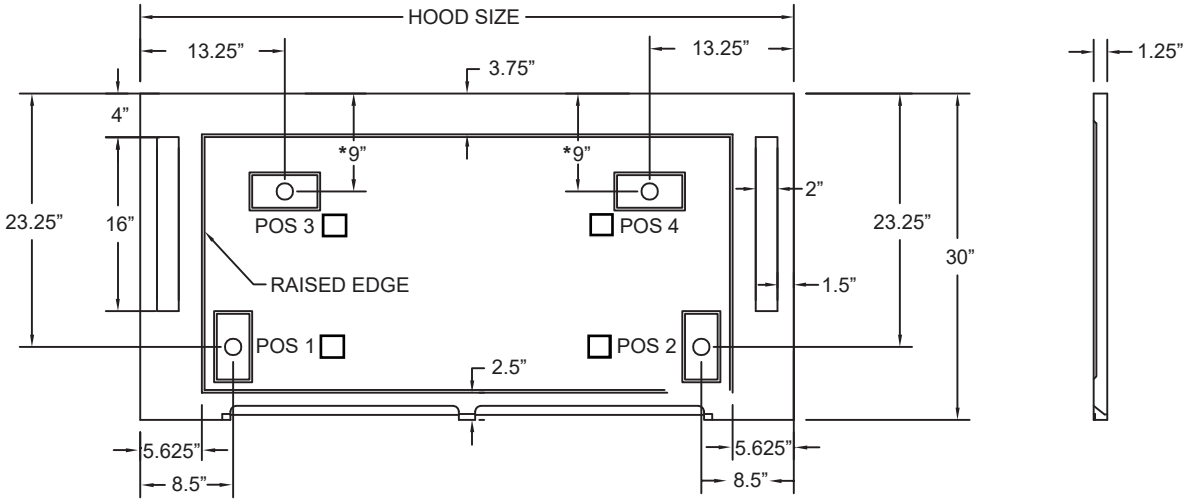

Part #	Superstructure			Worktop			Hood Opening		CFM @29”	CFM @18”	SP	Blower Model #	Shipping Weight
	W	H	D	W	H	D	W	H					
EH-613-36	36”	56”	33.25”	36”	1.25”	30”	26”	29”	567	354	.25	BL-600-36	190
EH-613-48	48”	56”	33.25”	48”	1.25”	30”	38”	29”	833	521	.25	BL-600-48	560
EH-613-60	60”	56”	33.25”	60”	1.25”	30”	50”	29”	1100	688	.34	BL-600-60	675
EH-613-72	72”	56”	33.25”	72”	1.25”	30”	62”	29”	1367	854	.34	BL-600-72	790
EH-613-96	96”	56”	33.25”	96”	1.25”	30”	86”	29”	1900	1188	.40	BL-600-96	1025