The Eliminator 700 Series: Perchloric Acid Hood

Applications: K-12; University; Private Industry

SPECIFY FITTINGS/ FIXTURES REQUIRED:

NONE
SERVICE
NONE
SERVICE
NONE
SERVICE
NONE
SERVICE
NONE
SERVICE

SPECIFY FITTINGS/ FIXTURES REQUIRED:

COLD WATER WASH DOWN
SERVICE
NONE
SERVICE
NONE
SERVICE
NONE
SERVICE
NONE
SERVICE

COLD WATER WASH DOWN *REQUIRED* FOR PERCHLORIC ACID HOOD
If needed in other location, specify:
_____

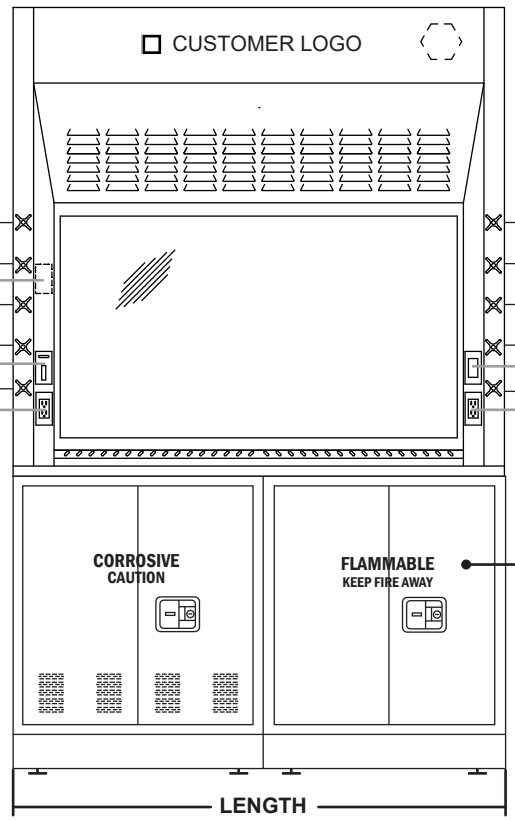

NONE

BLOWER SWITCH (OPTIONAL) ☐

120V GFI DUPLEX (OPTIONAL) ☐

☐ LIGHT SWITCH (OPTIONAL)

☐ 120V GFI DUPLEX (OPTIONAL)

☐36" ☐48" ☐60" ☐72" ☐96"

Custom sizes available ; Contact AMS

PRE-PIPING:

NONE

BYPASS TYPE:

OPEN BYPASS (standard)

BASE CABINET OPTIONS:

NONE	___"W x ___"H x ___"D
NONE	___"W x ___"H x ___"D
NONE	___"W x ___"H x ___"D

CABINET PULL OPTIONS:

N/A

WIRING DIAGRAM:

NO

Special Requirements:_____

_____

_____

_____

STANDARD FEATURES

- **Interior Baffle Arrangement:**
  Fixed Baffles (standard)
- **Exhaust Collar:**
  Type 316 s/s - 10" Dia. Round (standard)
  Other _____
- **Interior Lighting Fixture:**
  Standard LED Fixtures (standard)
- **Sash Frame & Glass:**
  316 Stainless Steel Frame w/ Laminated Safety Glass (standard)
- **Airfoil:**
  316 Stainless Steel (standard)
- **Sash Type:**
  Vertical (standard)
- **Additional Features:**
  Type 316 Stainless Steel Built-In Trough
  Type 316 Stn. Stl. One-piece integral work surface & liner

OPTIONAL ACCESSORIES

Lattice Assembly:
NONE

Interior Lighting Fixture:
☐ Explosion Proof Light

Airfoil:
PAINTED STEEL (STANDARD)

Trough:
PAINTED STEEL (STANDARD)

Ceiling Enclosure:
☐ Yes (Height:_____) ☐ No
- **Hinged Access Panel on Ceiling Enclosures?:**
  ☐ Yes ☐ No

Finished Back:
☐ Yes ☐ No

Sash Type:
COMBINATION (Horizontal + Vertical)

Additional Options:
☐ Blower ☐ Sash Alarm
☐ Automatic Sash Return ☐ Sash Locks
☐ Sash Cap ☐ Sash Stops

Pass Through Cord Ports
☐ 1.5" Dia. Front Post Cord Ports
☐ _____ Dia. Side Panel Cord Ports (please specify size)

Service Fixture Type:
Special Plumbing Requirements

Pre-Wire + Electrical:
☐ Yes ☐ No

AIR MASTER SYSTEMS CORP
6480 Norton Center Dr.
Muskegon, MI 49441
Tel: (231) 798-1111 Fax: (231) 798-4000

Customer:_____

Qty:_____

Color:_____

The Eliminator 700 Series: Perchloric Acid Hood

Applications: K-12; University; Private Industry

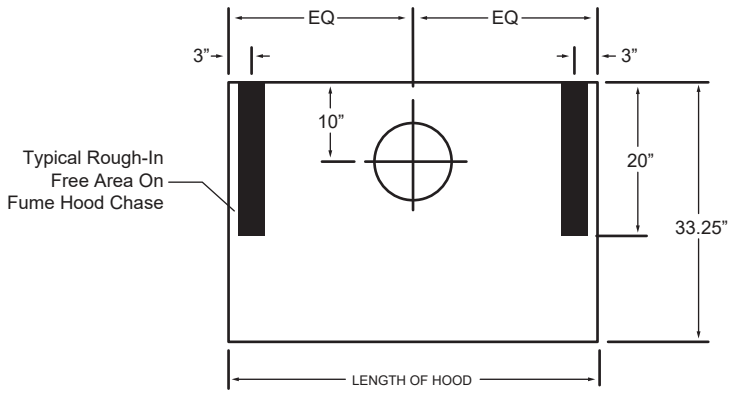

Service Rough-In Detail
(For 36”, 48”, 60”, & 72” Hoods)

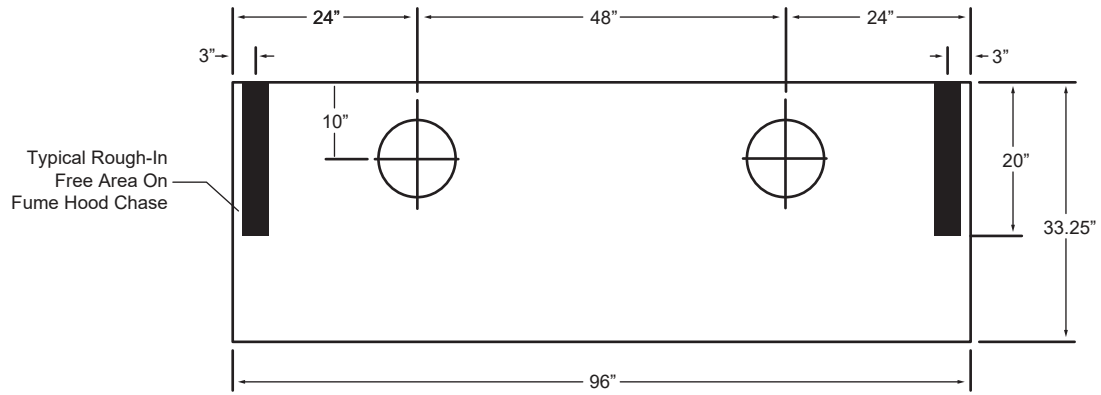

Service Rough-In Detail
(For 96” Hoods)

Part #	Superstructure			Worktop			Hood Opening		CFM @29”	CFM @18”	SP	Blower Model #	Shipping Weight
	W	H	D	W	H	D	W	H					
EH-716-36	36”	56”	33.25”	36”	1.25”	30”	26”	29”	567	354	.26	BL-700-36	190
EH-716-48	48”	56”	33.25”	48”	1.25”	30”	38”	29”	833	521	.33	BL-700-48	560
EH-716-60	60”	56”	33.25”	60”	1.25”	30”	50”	29”	1100	688	.34	BL-700-60	675
EH-716-72	72”	56”	33.25”	72”	1.25”	30”	62”	29”	1367	854	.34	BL-700-72	790
EH-716-96	96”	56”	33.25”	96”	1.25”	30”	86”	29”	1900	1188	.40	BL-700-96	1025